Lightrax

Tyco Electronics

Our commitment. Your advantage.

Channels

Fittings

Installation tools and accessories

Hardware and mounting kits

Introduction

System description/overview/kit overview 5
Assembly procedures 7

Channels

Solid channel with cover 10
Slotted channel with cover 10

Fittings

Channel splice 12
Fitting splice 12
Horizontal elbow 90° 12
Horizontal elbow 45° 13
Vertical outside elbow (Down) 90° 13
Vertical outside elbow (Down) 45° 13
Vertical inside elbow (Up) 90° 14
Vertical inside elbow (Up) 45° 14
Horizontal tee 14
Horizontal tee reducer. 4" to 2" 15
Horizontal tee reducer, 8" to 4" 15
Horizontal tee reducer, 12" to 8" 15
Horizontal tee reducer, 12" to 4" 16
Vertical tee 16
Vertical tee reducer w/divider, 4" to 2" 16
Vertical tee reducer w/divider, 8" to 2" 17
Vertical tee reducer w/divider, 12" to 4" 17
Vertical tee reducer 17
Dual vertical tee reducer, 4" to 2" 18
Dual vertical tee reducer, 8" to 4" 18
Dual vertical tee reducer, 12" to 4" 18
4-way cross 19
4-way cross, 8" to 4" 19
Reducer, 4" to 2" 19
Reducer, 8" to 4" 20
Reducer, 12" to 4" 20
Reducer, 12" to 8" 20
Off-set reducer - left 21
Off-set reducer - right 21
Endcap 21
Trumpet 22
Lightrax to Fiberguide adapter 22
Lightrax to Warren & Brown adapter 22
2" Square to single round adapter 23
2" Square to dual round adapter 23
4" Square to dual round adapter 23
Anchor clamp 24
Split flex tubing - dual shell 24
Quick drop 25
Adapters to flex tubing 25

Installation tools and accessories

Slotted channel trumpet 28
Drilling templates 28
Quick drop installation template 28

Hardware and mounting kits

Hardware kits 30
End accessible threaded rod mounting kit 2" (50mm) or 4" (100mm) 30
End accessible threaded rod mounting kit 8" (200mm) 30
End accessible threaded rod mounting kit 12" (300mm) 31
Saddle bracket 4" (100mm) 31
Saddle bracket 8" (200mm) 31
Saddle bracket 12" (300mm) 32
Equipment rack horizontal mounting kit 2" (50mm) 32
Equipment rack horizontal mounting kit 4" (100mm) 32
Equipment rack horizontal mounting kit 8" (200mm) 33
Hanger bracket 4" (100mm) 33
Hanger bracket 8" (200mm) 33
Hanger bracket 12" (300mm) 34
Ladder rack mounting kit, 4" or 2" 34
Ladder rack mounting kit, 8" 34
Offset ladder rack mounting kit 4" 35
Offset ladder rack mounting kit 8" 35
Side wall support 4" 35
Side wall support 8" 36
Side wall support 12" 36
Equipment rack vertical mounting kit 2" (50mm) 36
Equipment rack vertical mounting kit 4" (100mm) 37

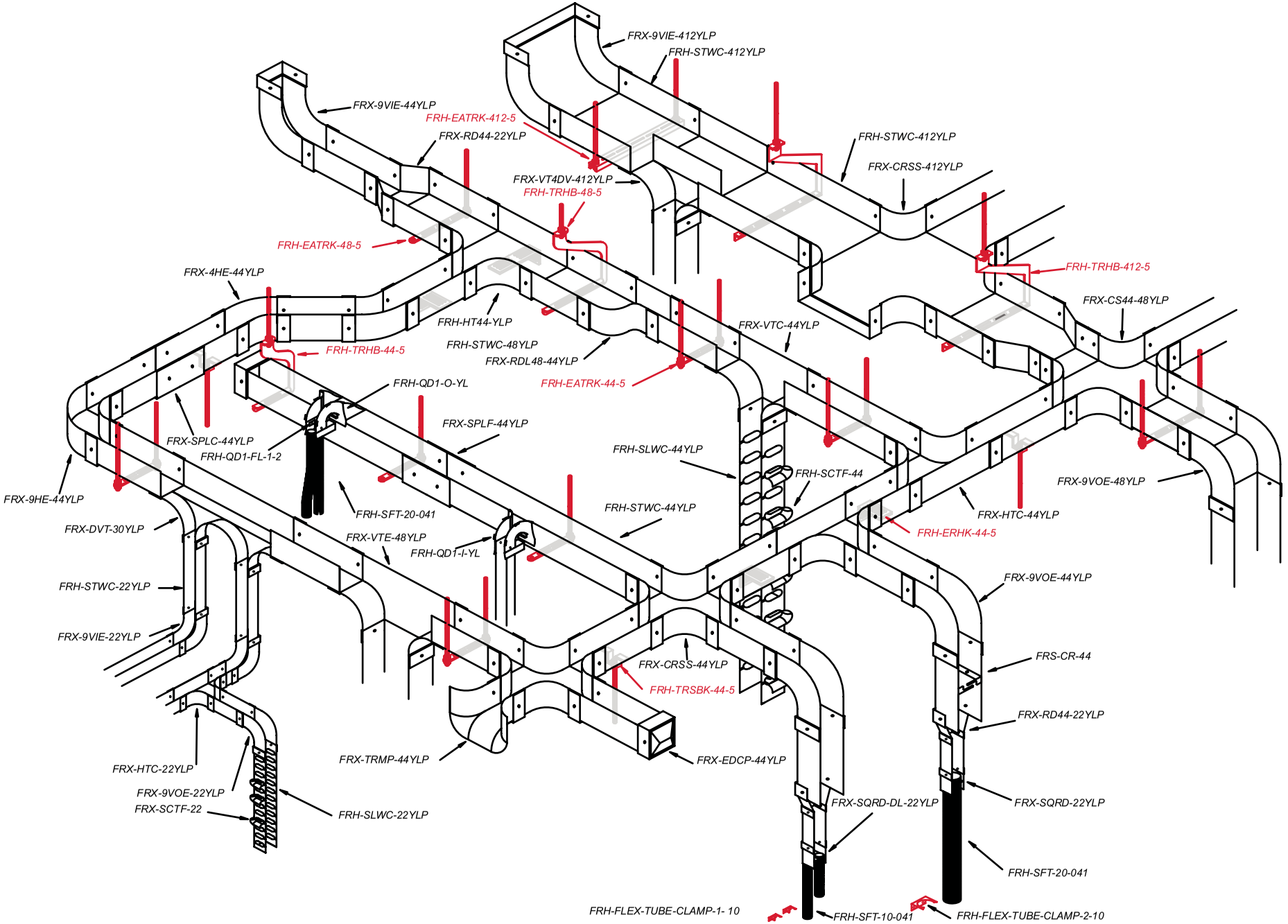
FRX-9VIE-412YLP
FRH-STWC-412YLP
FRX-9VIE-44YLP
FRH-EATRK-412-5
FRX-RD44-22YLP
FRH-STWC-412YLP
FRX-CRSS-412YLP
FRX-VT4DV-412YLP
FRH-TRHB-48-5
FRH-EATRK-48-5
FRH-TRHB-412-5
FRX-4HE-44YLP
FRX-CS44-48YLP
FRH-HT44-YLP
FRX-VTC-44YLP
FRH-STWC-48YLP
FRH-TRHB-44-5
FRX-RDL48-44YLP
FRH-EATRK-44-5
FRH-QD1-O-YL
FRX-SPLF-44YLP
FRX-SPLC-44YLP
FRH-QD1-FL-1-2
FRH-SLWC-44YLP
FRH-SCTF-44
FRX-9VOE-48YLP
FRX-9HE-44YLP
FRH-SFT-20-041
FRH-STWC-44YLP
FRX-HTC-44YLP
FRX-DVT-30YLP
FRH-ERHK-44-5
FRX-VTE-48YLP
FRH-QD1-I-YL
FRX-9VOE-44YLP
FRH-STWC-22YLP
FRX-9VIE-22YLP
FRS-CR-44
FRX-CRSS-44YLP
FRH-TRSBK-44-5
FRX-RD44-22YLP
FRX-HTC-22YLP
FRX-TRMP-44YLP
FRX-EDCP-44YLP
FRX-9VOE-22YLP
FRX-SQRD-DL-22YLP
FRX-SQRD-22YLP
FRX-SCTF-22
FRH-SLWC-22YLP
FRH-SFT-20-041
FRH-FLEX-TUBE-CLAMP-1- 10
FRH-SFT-10-041
FRH-FLEX-TUBE-CLAMP-2-10

Introduction

System description

The Lightrax fiber optic raceway system is a fully enclosed ducting system that segregates, routes, and protects fiber optic cables and jumpers from the point of building entry to the fiber termination and distribution equipment. The separation from twisted pair and coax cables and the convenient lay-in design provide for easy tracing and access as well as protection from being snagged, crimped, or overly stressed. Straight channels and curved fittings are specifically designed to prevent fibers from exceeding the minimum bend radius requirement. The system's modular design and extensive mounting kit selection enable the project engineer to meet cable capacity requirements and future expansion needs using existing superstructure, cable racking, and/or equipment racking. The flexibility and simplicity of the Lightrax system ensure cost effective installations for new or existing cable routes in central offices, CEVs, headends, remote offices, data centers, and wiring closets. Fittings can be offered in two types of material: FRS (Fiber Raceway-standard) fittings are made of a UL2024 rated high-impact thermoplastic and FRH (Fiber Raceway halogen free) fittings are made of a low smoke zero halogen (LSZH) material. Ducts are always made of FRH material. The channels/ducts and fittings are singlemode yellow.

Capacities

	Duct 50 x 50 mm 2" x 2"	Duct 100 x 100 mm 4" x 4"	Duct 100 x 200 mm 4" x 8"	Duct 100 x 300 mm 4" x 12"	Tube ø 50 mm 2"	Tube ø 25 mm 1"
1.7 mm patchcord Recommended	384	960	1920	2880	250	100
2.4 mm patchcords Recommended	200	500	1000	1500	144	50
3.0 mm patchcord Recommended	128	320	640	965	100	35
1.7 mm patchcord Maximum	*384*	*1728*	*3456*	*5184*		
2.4 mm patchcord Maximum	*200*	*905*	*1810*	*2715*		
3.0 mm patchcord Maximum	*128*	*580*	*1158*	*1738*		

Recommended numbers are according to Telcordia 449 (maximum 2" (50 mm) pile height).

Channels and fittings

Channels and fittings are available in four cross-sectional sizes: 2" x 2", 4" x 4", 4" x 8" and 4" x 12".

All system components are designed to provide cable lay-in capability, eliminating the need for pulling cables through an enclosed system during installation or cable retrieval. Channel covers are snapped in place. Fitting covers are easily positioned on matching Velcro strips. Channels and fittings are slipped together, end-to-end, and secured in position with bolts.

Mounting Kits

Channels and fittings are supported by direct mounting to existing supports. The Lightrax system has been designed to be supported every 900 mm. To do this easily and at minimum cost, direct mounting kits are available for attachment to existing ladder racking, equipment racks and auxiliary framing.

Assembly procedures

Channel to fitting assembly

All fittings are designed with female receptacles at their outlets. These receptacles are dimensionally designed to accept straight channels without the use of additional parts or junction kits. This helps to reduce the total number of parts required for typical installations. In general, fewer parts to install translates into reduced material costs and assembly time. To install a fitting to the end of a channel section, simply slip the channel into the receptacle of the fitting. Fasten the two components using M6 mushroom head bolts and nuts (FRH-BNC-16-200). When complete, the channel cover fits under the fitting cover, eliminating any gaps.

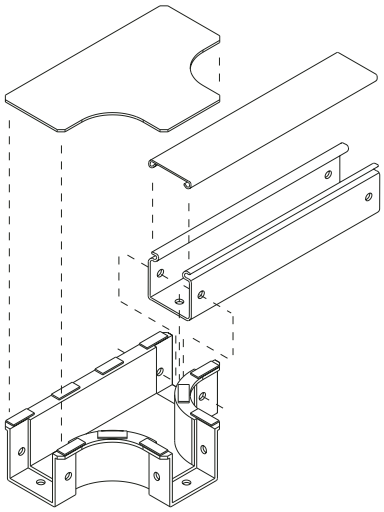

Channel to channel assembly

To create straight sections of channel beyond six feet (1,83 m) or 2 meter in length, individual straight sections are joined using a channel splice (FRX-SPLC-XXYLP). Position the end of one channel half way into the channel splice. Fasten the two components using M6 mushroom head bolts and nuts (FRH-BNC-16-200). Butt the second channel to the first within the channel splice, assemble and fasten in a similar manner.

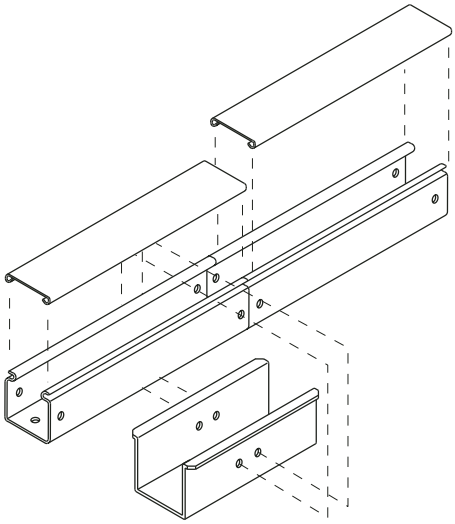

Fitting to fitting assembly

To assemble two fittings together use a fitting splice (FRX-SPLF-XXP). Fitting splices are designed to fit within the female receptacle on each fitting. Position the fitting splice within the receptacle of the fitting itself.
Fasten the two components using M6 mushroom head bolts and nuts (FRH-BNC-16-200).

Place the second fitting over the fitting splice and fasten in a similar manner.

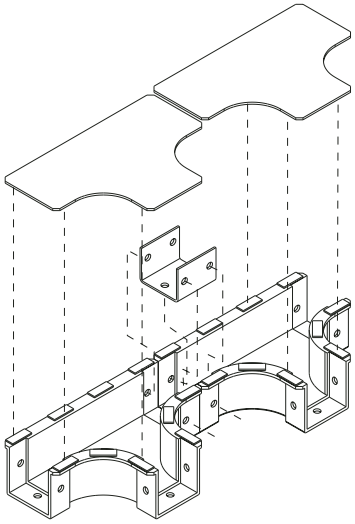

Channels

- All dimensions are for reference only.
- Finish: all outside surfaces have a haircell texture.
- Channels are always pre-drilled.
- Channels are always made of FRH material (halogen free).

Solid channel with cover

FRH - STWC - XX YL P

Size			Dimensions (mm)		
XX	inches	mm	A	B	C
22	2 x 2	50x50	50	50	2000
44	4 x 4	100x100	100	100	2000
48	4 x 8	100x200	100	200	2000
412	4 x 12	100x300	100	300	2000

Weight

22	0,93 kg
44	2,41 kg
48	3,83 kg
412	5,22 kg

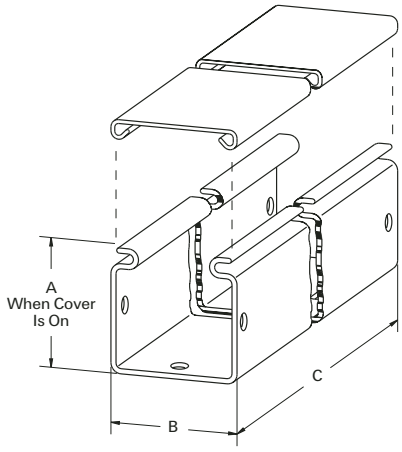

Slotted channel with cover

FRH - SLWC - XX YLP

Size			Dimensions (mm)					
XX	inches	mm	A	B	C	D	E	F
22	2 x 2	50x50	50	50	2000	100	100	32
44	4 x 4	100x100	100	100	2000	100	100	32

Compatible with slotted channel trumpet FRH-SCTF-22 or 44

Weight

22	0,86 kg
44	2,12 kg

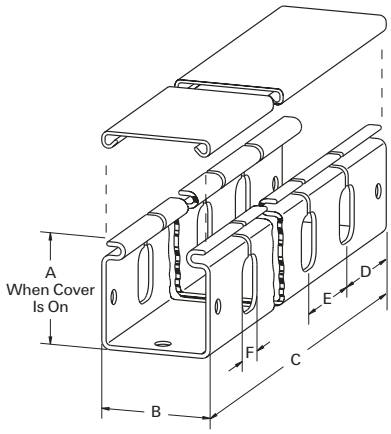

1 inch = 25,4 mm - Channels are always made of FRH material.

Fittings

- All dimensions are for reference only.
- Finish: all outside surfaces have a haircell texture.
- Fittings are always pre-drilled.

Channel splice

FRX - SPLC - XX YL P

S = Standard
H = Halogen free

Size			Dimensions (mm)		
XX	inches	mm	A	B	C
22	2 x 2	50x50	61	56	152
44	4 x 4	100x100	112	107	152
48	4 x 8	100x200	112	208	152
412	4 x 12	100x300	112	315	152

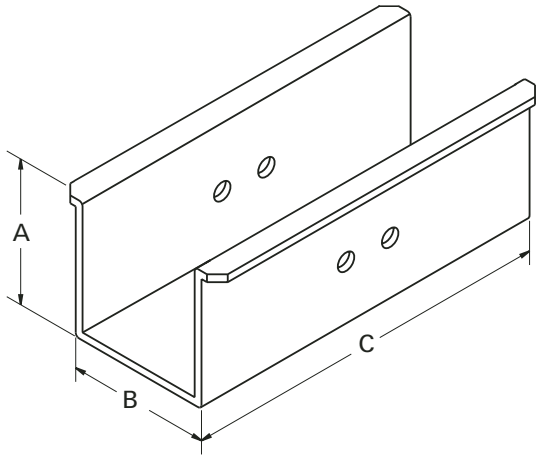

Fitting splice

FRX - SPLF - XX P

S = Standard
H = Halogen free

Size			Dimensions (mm)		
XX	inches	mm	A	B	C
22	2 x 2	50x50	39	51	46
44	4 x 4	100x100	86	102	76
48	4 x 8	100x200	86	203	76
412	4 x 12	100x300	83	305	76

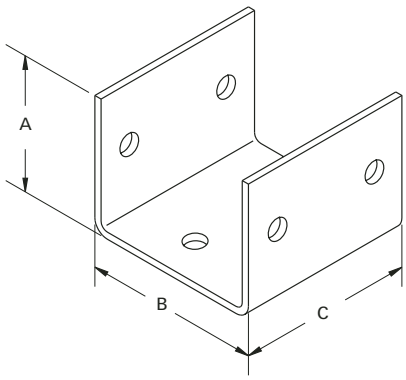

Horizontal elbow, 90°

FRX - 9HE - XX YL P

S = Standard
H = Halogen free

Size			Dimensions (mm)		
XX	inches	mm	A	B	C
22	2 x 2	50x50	130	130	61
44	4 x 4	100x100	197	197	112
48	4 x 8	100x200	344	344	112
412	4 x 12	100x300	446	446	113

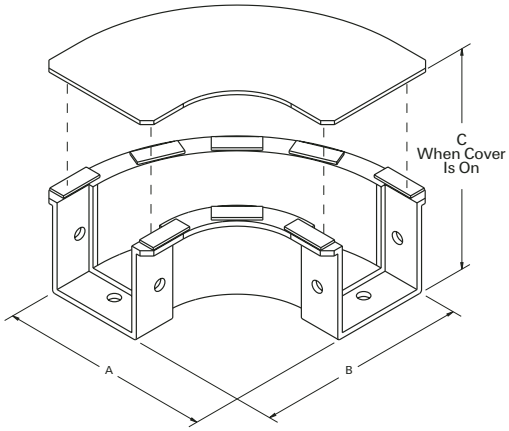

1 inch = 25,4 mm

Horizontal elbow, 45°

FR**X** - 4HE - **XX** YL P

└ **S** = Standard
H = Halogen free

XX	Size inches	Size mm	Dimensions (mm) A	Dimensions (mm) B
22	2 x 2	50x50	58	61
44	4 x 4	100x100	112	112
48	4 x 8	100x200	208	112
412	4 x 12	100x300	313	113

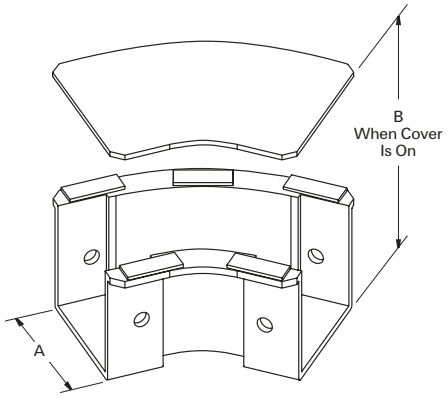

Vertical outside elbow (down), 90°

FR**X** - 9VOE - **XX** YL P

└ **S** = Standard
H = Halogen free

XX	Size inches	Size mm	Dimensions (mm) A	Dimensions (mm) B
22	2 x 2	50x50	130	58
44	4 x 4	100x100	197	112
48	4 x 8	100x200	194	208
412	4 x 12	100x300	194	313

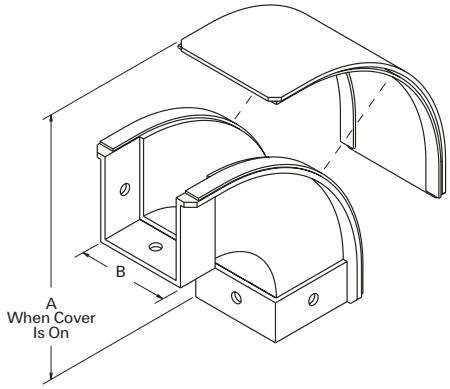

Vertical outside elbow (down), 45°

FR**X** - 4VOE - **XX** YL P

└ **S** = Standard
H = Halogen free

XX	Size inches	Size mm	Dimensions (mm) A	Dimensions (mm) B
22	2 x 2	50x50	61	58
44	4 x 4	100x100	112	112
48	4 x 8	100x200	112	208
412	4 x 12	100x300	113	313

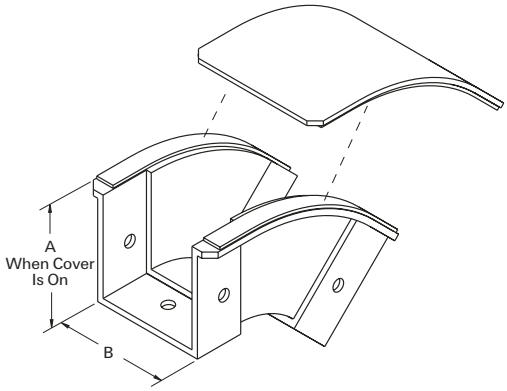

1 inch = 25,4 mm

Vertical inside elbow (up), 90°

FR**X** - 9VIE - **XX** YL P

└ **S** = Standard
H = Halogen free

	Size		Dimensions (mm)	
XX	inches	mm	A	B
22	2 x 2	50x50	132	58
44	4 x 4	100x100	197	112
48	4 x 8	100x200	197	208
412	4 x 12	100x300	197	313

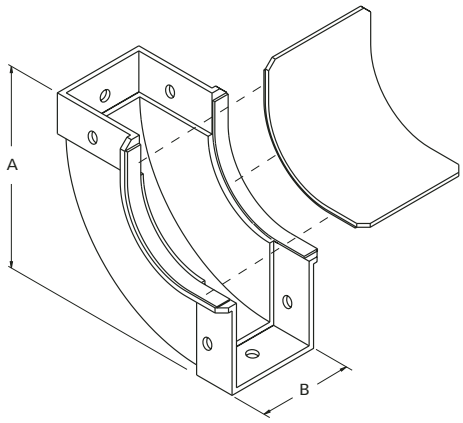

Vertical inside elbow (up), 45°

FR**X** - 4VIE - **XX** YL P

└ **S** = Standard
H = Halogen free

	Size		Dimensions (mm)	
XX	inches	mm	A	B
22	2 x 2	50x50	61	58
44	4 x 4	100x100	112	112
48	4 x 8	100x200	112	208
412	4 x 12	100x300	113	313

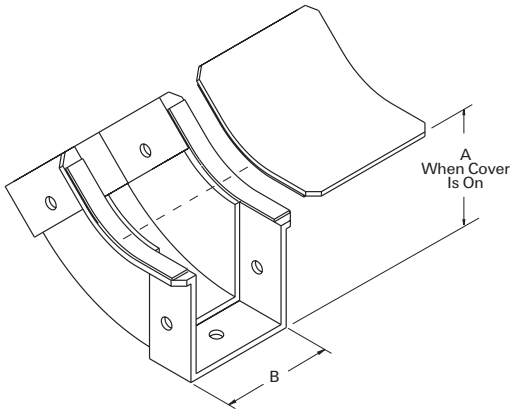

Horizontal tee

FR**X** - HTC - **XX** YL P

└ **S** = Standard
H = Halogen free

	Size		Dimensions (mm)		
XX	inches	mm	A	B	C
22	2 x 2	50x50	129	199	61
44	4 x 4	100x100	196	281	112
48	4 x 8	100x200	344	477	112
412	4 x 12	100x300	446	578	113

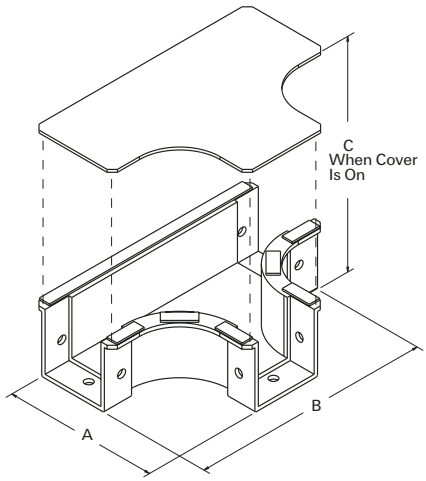

1 inch = 25,4 mm

Horizontal tee reducer, 4″ to 2″

FRX - HT2 - 44 YL P
└ S = Standard
H = Halogen free

Size		Dimensions (mm)		
inches	mm	A	B	C
4 to 2	100 to 50	184	222	112

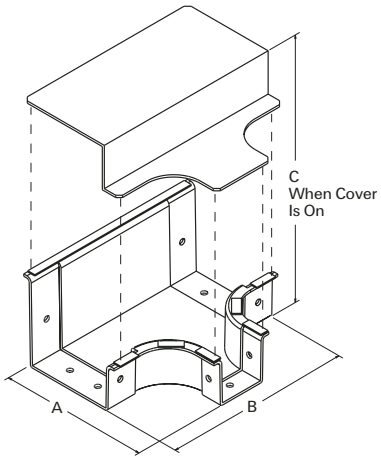

Horizontal tee reducer, 8″ to 4″

FRX - HT44 - 48 YL P
└ S = Standard
H = Halogen free

Size		Dimensions (mm)		
inches	mm	A	B	C
8 to 4	200 to 100	292	273	112

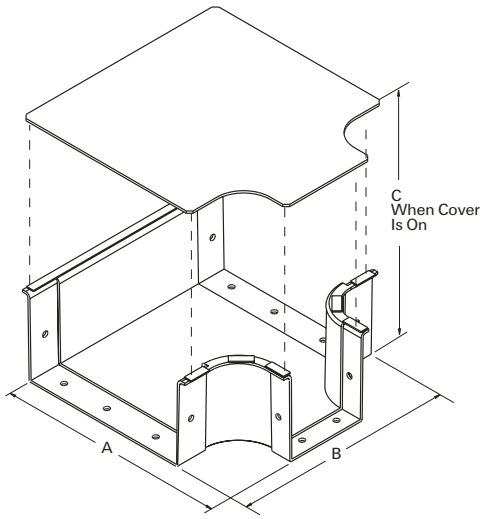

Horizontal tee reducer, 12″ to 8″

FRX - HT48 - 412 YL P
└ S = Standard
H = Halogen free

Size		Dimensions (mm)		
inches	mm	A	B	C
12 to 8	300 to 200	445	477	113

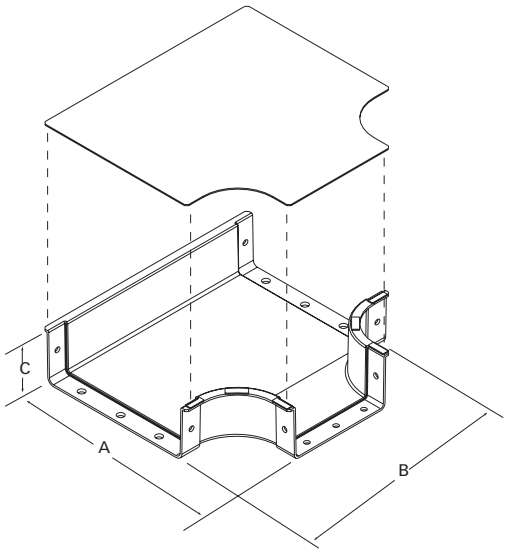

1 inch = 25,4 mm

Horizontal tee reducer, 12" to 4"

FRX - HT44 - 412 YL P

S = Standard
H = Halogen free

Size		Dimensions (mm)		
inches	mm	A	B	C
12 to 4	300 to 100	445	375	113

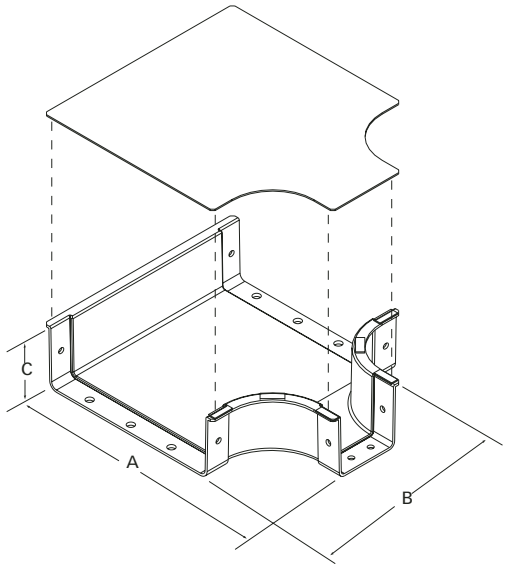

Vertical tee

FRX - VTC - XX YL P

S = Standard
H = Halogen free

Size			Dimensions (mm)		
XX	inches	mm	A	B	C
22	2 x 2	50x50	134	199	58
44	4 x 4	100x100	197	282	112

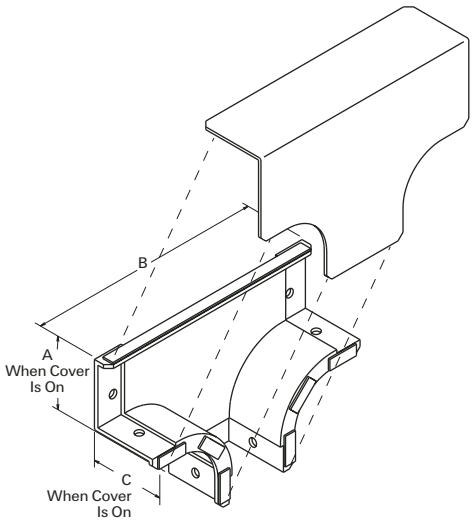

Vertical tee reducer w/divider, 4" to 2"

FRX - VT2DD - 44 YL P

S = Standard
H = Halogen free

Size		Dimensions (mm)			
inches	mm	A	B	C	D
4 to 2	100 to 50	183	224	112	58

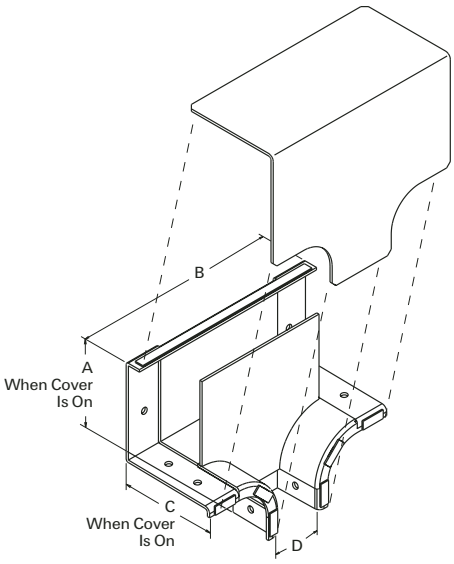

1 inch = 25,4 mm

Vertical tee reducer w/divider, 8″ to 2″

FRX - VT2DV - 48 YL P
- S = Standard
- H = Halogen free

Size		Dimensions (mm)			
inches	mm	A	B	C	D
8 to 2	200 to 50	183	224	213	58

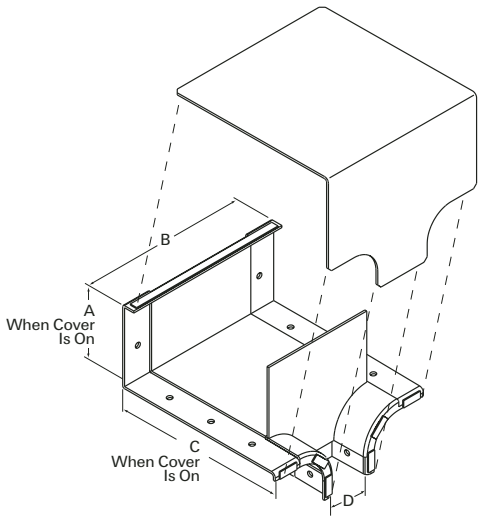

Vertical tee reducer w/divider, 12″ to 4″

FRX - VT4DV - 412 YL P
- S = Standard
- H = Halogen free

Size		Dimensions (mm)			
inches	mm	A	B	C	D
12 to 4	300 to 100	242	375	318	112

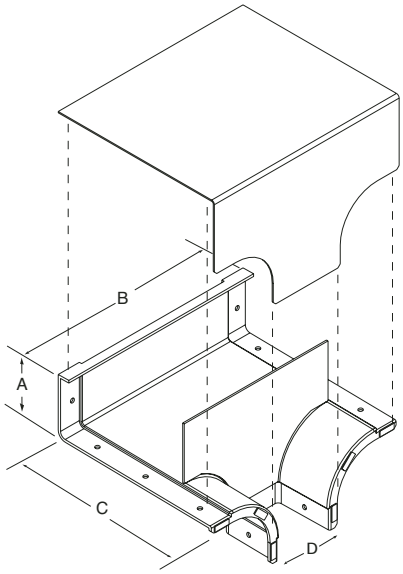

Vertical tee reducer

FRX - VT2D - 44 YL P
- S = Standard
- H = Halogen free

Size		Dimensions (mm)			
inches	mm	A	B	C	D
4 to 2	100 to 50	183	224	112	58

FRX - VT4D - 48 YL P
- S = Standard
- H = Halogen free

Size		Dimensions (mm)			
inches	mm	A	B	C	D
8 to 4	200 to 100	248	376	213	112

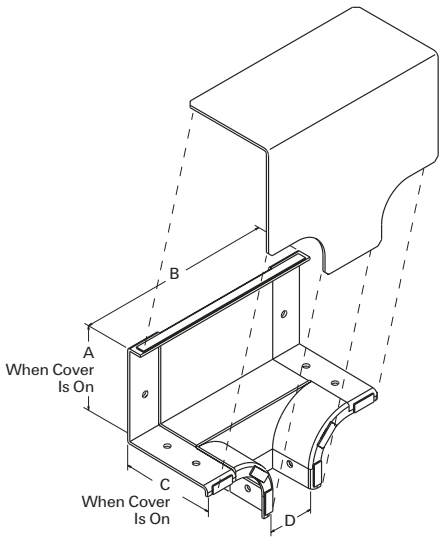

1 inch = 25,4 mm

Dual vertical tee reducer, 4″ to 2″

FR**X** - DVT - 30 YL P

└ **S** = Standard
H = Halogen free

Size		Dimensions (mm)			
inches	mm	A	B	C	D
4 to 2	100 to 50	181	347	112	71

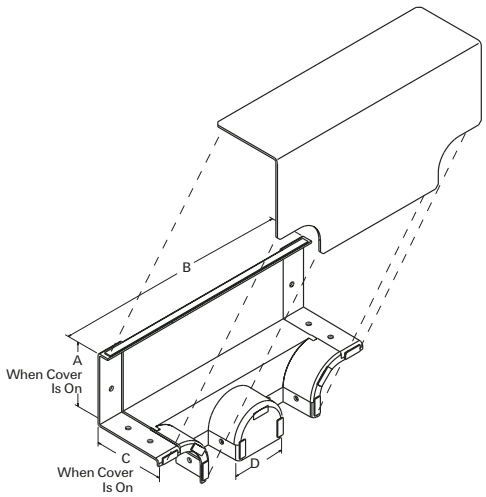

Dual vertical tee reducer, 8″ to 4″

FR**X** - DVT - 30 - 48 YL P

└ **S** = Standard
H = Halogen free

Size		Dimensions (mm)			
inches	mm	A	B	C	D
8 to 4	200 to 100	224	454	216	76

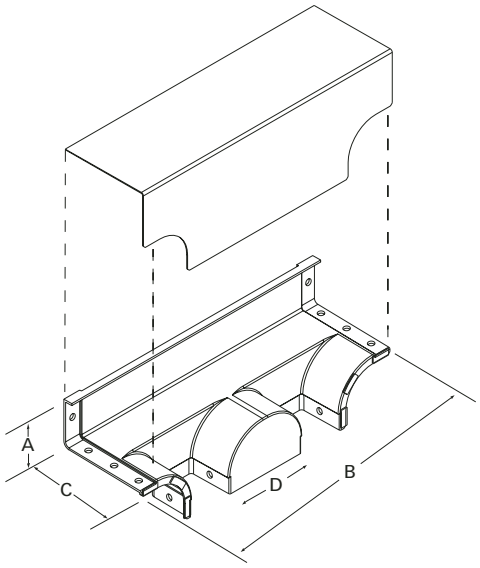

Dual vertical tee reducer, 12″ to 4″

FR**X** - DVT - 30 - 412 YL P

└ **S** = Standard
H = Halogen free

Size		Dimensions (mm)			
inches	mm	A	B	C	D
12 to 4	300 to 100	242	674	318	193

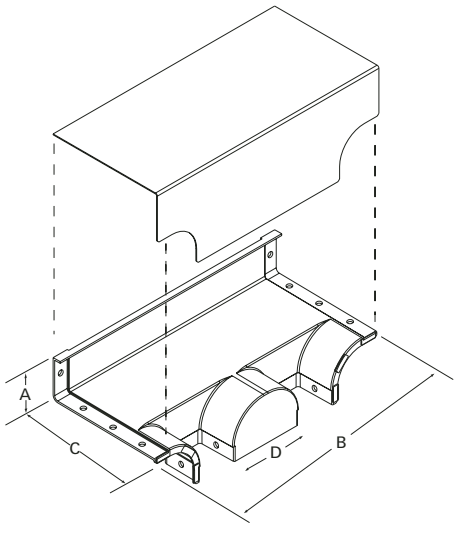

1 inch = 25,4 mm

4-Way cross

FR**X** - CRSS - **XX** YL P

S = Standard
H = Halogen free

Size			Dimensions (mm)		
XX	inches	mm	A	B	C
22	2 x 2	50x50	199	199	61
44	4 x 4	100x100	282	282	112
48	4 x 8	100x200	478	478	112
412	4 x 12	100x300	575	575	113

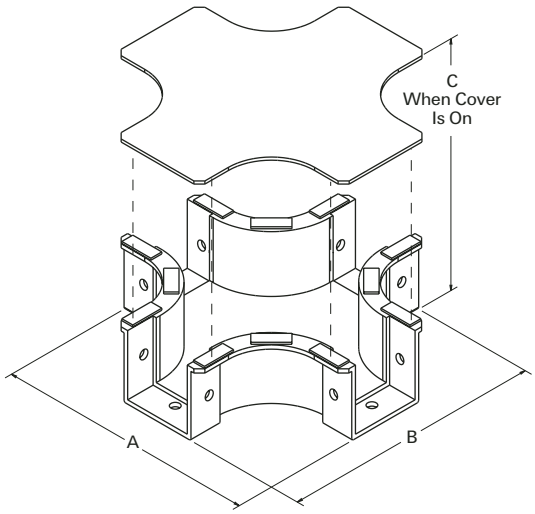

4-Way cross, 8" to 4"

FR**X** - CS44 - 48 YL P

S = Standard
H = Halogen free

Size		Dimensions (mm)		
inches	mm	A	B	C
8 to 4	200 to 100	275	377	112

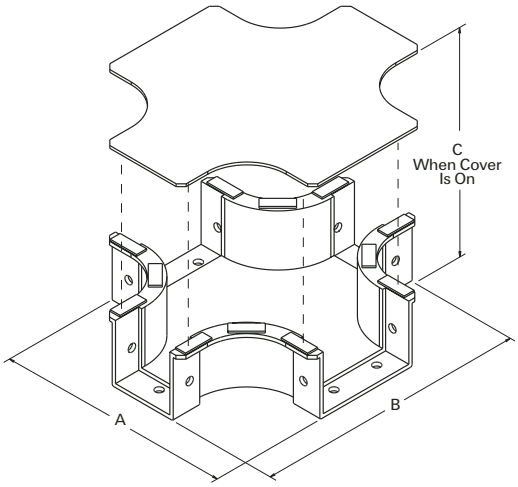

Reducer, 4" to 2"

FR**X** - RD44 - 22 YL P

S = Standard
H = Halogen free

Size		Dimensions (mm)				
inches	mm	A	B	C	D	E
4 to 2	100 to 50	61	58	89	112	112

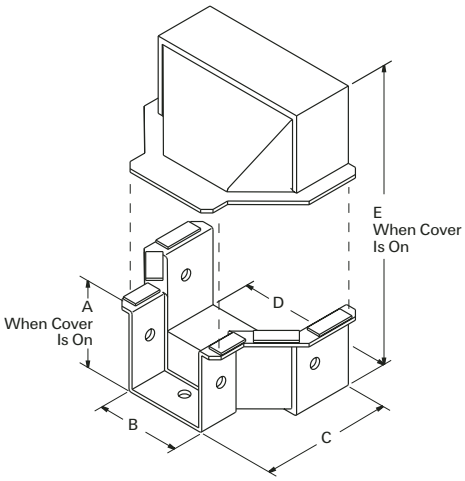

1 inch = 25,4 mm

Reducer, 8″ to 4″

FRX - RD48 - 44 YL P

S = Standard
H = Halogen free

Size		Dimensions (mm)				
inches	mm	A	B	C	D	E
8 to 4	200 to 100	112	112	152	208	112

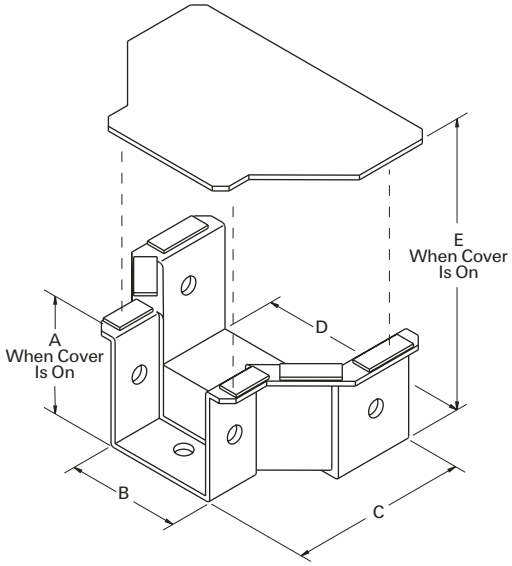

Reducer, 12″ to 4″

FRX - RD412 - 44 YL P

S = Standard
H = Halogen free

Size		Dimensions (mm)				
inches	mm	A	B	C	D	E
12 to 4	300 to 100	113	110	178	313	113

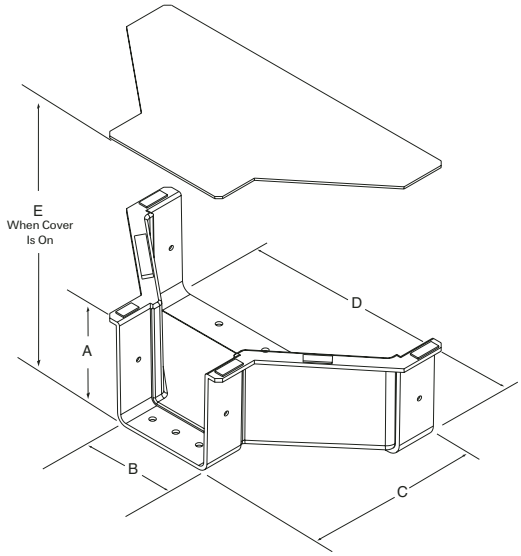

Reducer, 12″ to 8″

FRX - RD412 - 48 YL P

S = Standard
H = Halogen free

Size		Dimensions (mm)				
inches	mm	A	B	C	D	E
12 to 8	300 to 200	113	212	178	313	113

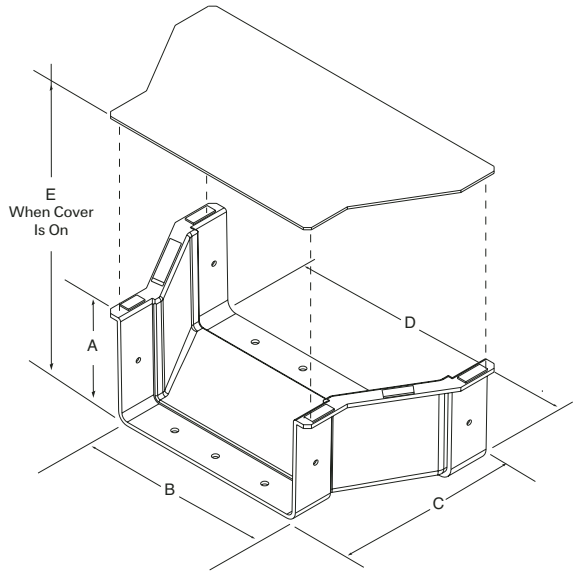

1 inch = 25,4 mm

Off-set reducer - left

FRX - RDL48 - 44 YL P

└ S = Standard
H = Halogen free

Size		Dimensions (mm)				
inches	mm	A	B	C	D	E
8 to 4	200 to 100	113	208	178	112	113

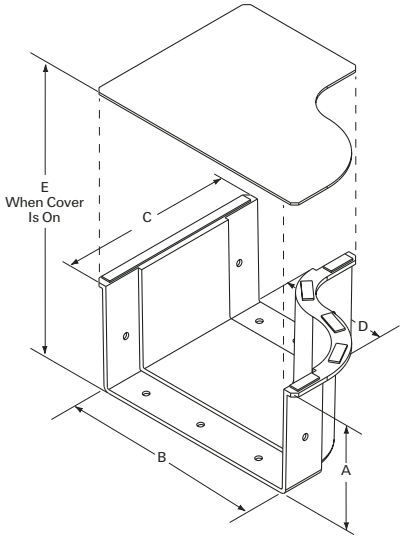

Off-set reducer - right

FRX - RDR48 - 44 YL P

└ S = Standard
H = Halogen free

Size		Dimensions (mm)				
inches	mm	A	B	C	D	E
8 to 4	200 to 100	113	208	178	112	113

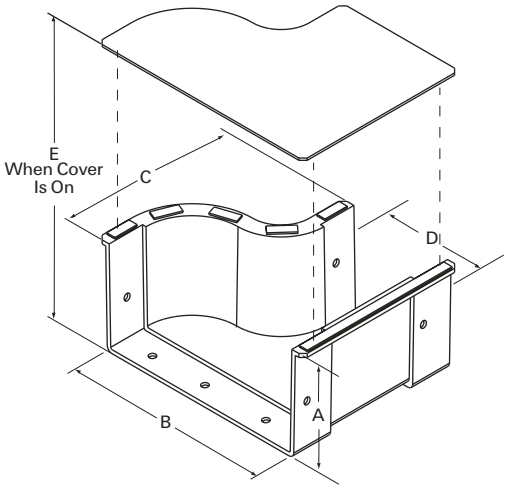

Endcap

FRX - EDCP - XX YL P

└ S = Standard
H = Halogen free

Size			Dimensions (mm)		
XX	inches	mm	A	B	C
22	2 x 2	50x50	57	57	38
44	4 x 4	100x100	108	108	64
48	4 x 8	100x200	112	212	71
412	4 x 12	100x300	112	315	71

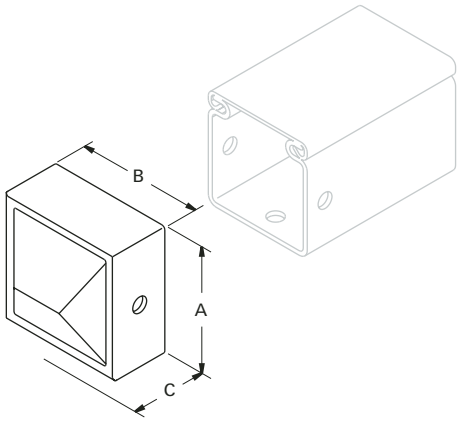

Light grey printed items are no part of the kit - 1 inch = 25,4 mm

Trumpet

FR**X** - TRMP - **XX** YL P

S = Standard
H = Halogen free

Size			Dimensions (mm)		
XX	inches	mm	A	B	C
22	2 x 2	50x50	70	92	137
44	4 x 4	100x100	89	150	198

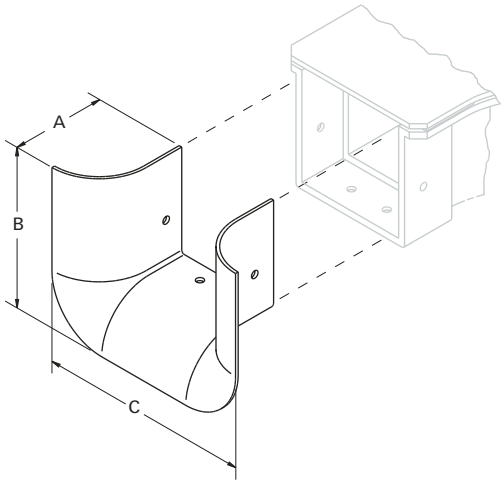

Lightrax to Fiberguide adapter

FR**X** - LTFA - **XX** YL P

S = Standard
H = Halogen free

Size			Dimensions (mm)		
XX	inches	mm	A	B	C
44	4 x 4	100x100	112	183	112

Note

- This part is used when transitioning from the ADC Telecommunications System to Lightrax

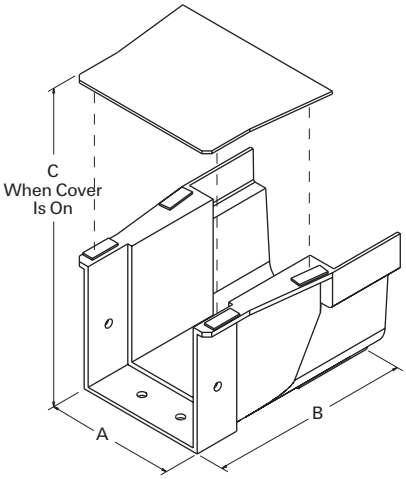

Lightrax to Warren & Brown adapter

FR**X** - WB - **XX** YL P

S = Standard
H = Halogen free

Size			Dimensions (mm)				
XX	inches	mm	A	B	C	D	E
22	2 x 2	50x50	53	76	57	73	73
44	4 x 4	100x100	112	152	112	128	152
48	4 x 8	100x200	212	152	112	246	269
412	4 x 12	100x300	314	152	112	326	371

Note

- This part is used when transitioning from the Warren & Brown System or RAYDUCT to Lightrax

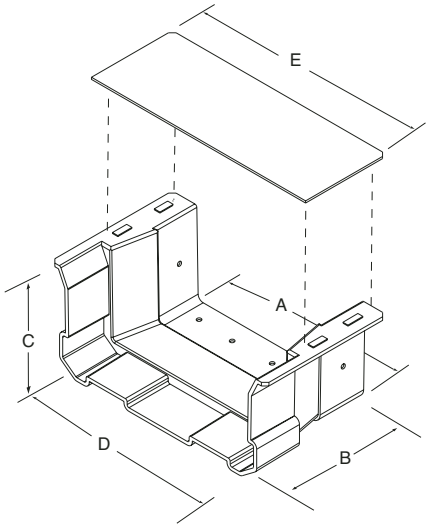

Light grey printed items are no part of the kit - 1 inch = 25,4 mm

2" square to single round adapter

FR**X** - SQRD - 22 YL P

└ **S** = Standard
H = Halogen free

Kit contents

1 - 2" x 2" (50 mm) square to single round adapter assembly

Note

Accepts 2" convoluted tubing -sold separately- (FRH-SFT-20-041).
Anchor clamps available.

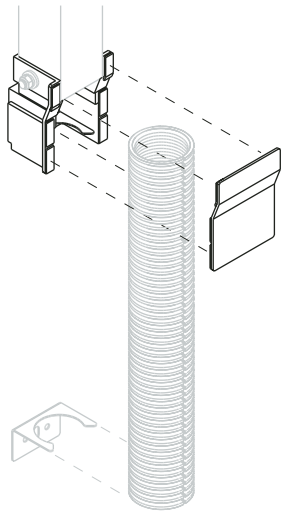

2" square to dual round adapter

FR**X** - SQRD - DL - 22 YL P

└ **S** = Standard
H = Halogen free

Kit contents

1 - 2" x 2" (50mm) square to dual round adapter assembly

Note

Accepts 2 - 1" convoluted tubing -sold separately- (FRH-SFT-10-041).
Anchor clamps available.

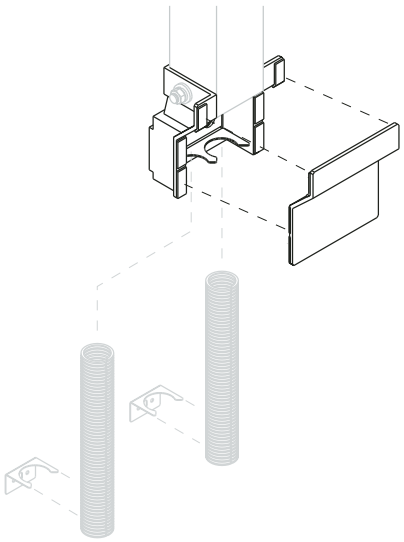

4" square to dual round adapter

FR**X** - SQRD - DL - 44 YL P

└ **S** = Standard
H = Halogen free

Kit contents

1 - 4" x 4" (100mm) square to dual round adapter assembly

Note

Accepts 2-2" convoluted tubing -sold separately- (FRH-SFT-20-041).
Anchor clamps available.

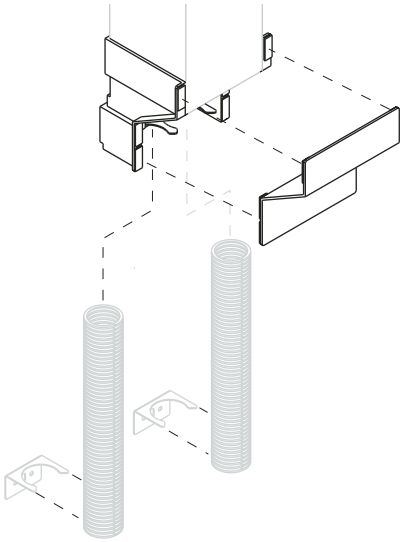

Light grey printed items are no part of the kit - 1 inch = 25,4 mm

Anchor clamp

FRH - FLEX - TUBE - CLAMP - X - 10

Tubing
- 1 - 1” (25 mm) convoluted tubing
- 2 - 2” (50 mm) convoluted tubing

Kit contents

10 - Anchor clamp

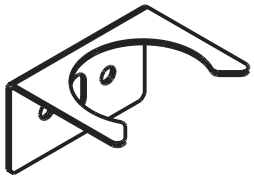

x 10

Split flex tubing - dual shell

FRH - SFT - XX - XXX

Flextube length
- 041: 41 ft (12,5m)

Tubing diameter
- 10: 1” (25mm) convoluted tubing
- 20: 2” (50mm) convoluted tubing

Kit contents

1 - Convoluted flextube

Color: black
Halogen free

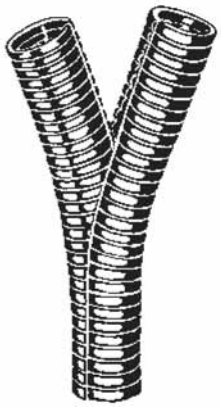

Light grey printed items are no part of the kit - 1 inch = 25,4 mm

Quick drop

FRH - QD1 - **X** YL

Application
- **O**: over-the-top
- **I**: in the duct (modified, smaller cover)

Size		Dimensions (mm)				
inches	mm	A	B	C	D	E
2 x 2	50x50	81	178	142	102	201

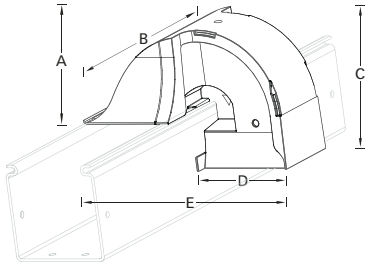

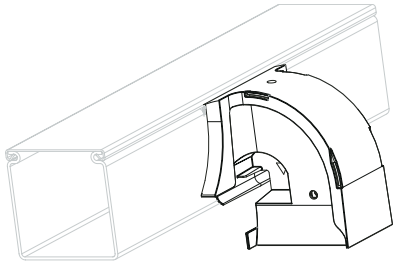

Note
- Compatible with 4 x 4, 4 x 8, 4 x 12 ducts
- Can fit on the duct or in the duct
- Halogen free
- Max. capacity : 100 (3 mm patch cord)
- See section “Installation tools and accessories” for a template

Adapters to flex tubing

FRH - QD1 - **X - X**

Size
- **2 - 1**: two 25mm (1”) diameter flextube
- **1 - 2**: one 50mm (2”) diameter flextube

- Fits in quick drop outlets (FRH-QD1-XYL)

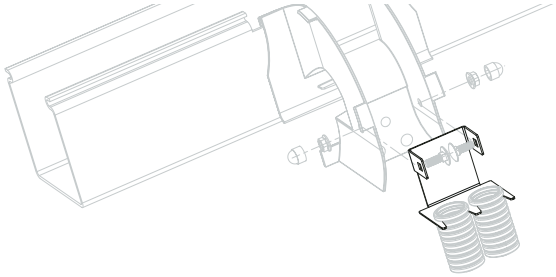

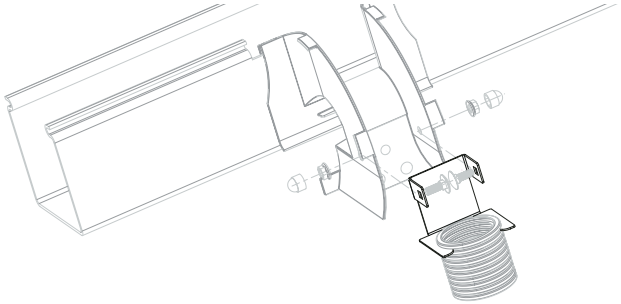

Light grey printed items are no part of the kit - 1 inch = 25,4 mm

Installation tools and accessories

Slotted channel trumpet

FRH - SCTF - **XX**

Size			Dimensions (mm)		
XX	inches	mm	A	B	C
22	2 x 2	50x50	25	26	46
44	4 x 4	100x100	25	71	46

Note

- All dimensions are for reference only
- Material: high impact thermoplastic
- Halogen free
- Fits in slotted channel FRH-SLWC-...

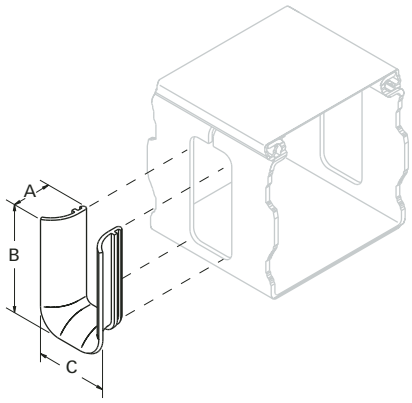

Drilling templates

FRH - DRIL

- Easy positioning of holes in ducts
- Slides over the ducts
- One template per duct size

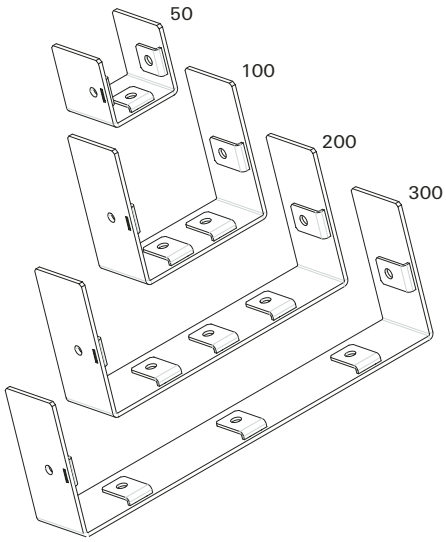

Quick drop installation template

FRH - DRIL - QD1 - TEM

- To be used when quick drop (FRH-QD1 ...) has to be installed in the duct

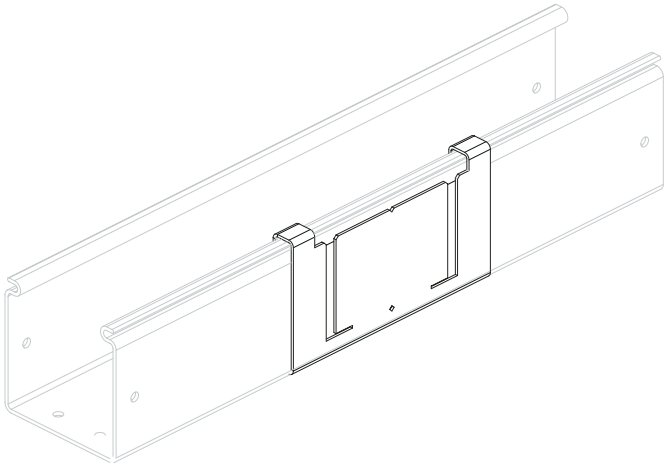

Light grey printed items are no part of the kit - 1 inch = 25,4 mm

Hardware and mounting kits

Hardware kits

FRH - BNC - 16 - 200

Kit contents

200 - M6 x 16 bolts
200 - M6 nuts
200 - yellow caps

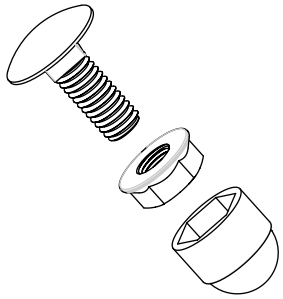

x 200

End accessible threaded rod mounting kit 2″ (50mm) or 4″ (100mm)

FRH - EATRK - 44 - 5

Kit contents

5 - End accessible thread rod bracket

Note

- Suitable for M14 and M16 threaded rod.
- Threaded rod purchased separately.
- Brackets are recommended every 900 mm for direct channel mounting.

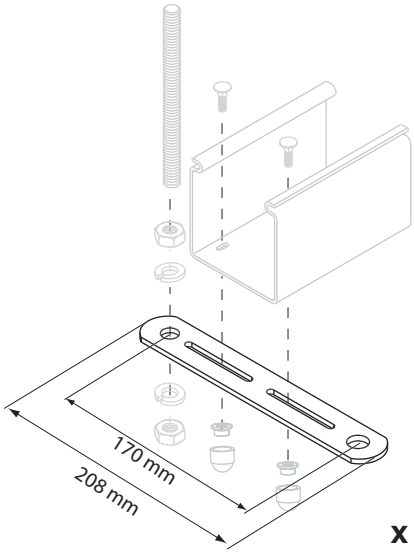

x 5

End accessible threaded rod mounting kit 8″ (200mm)

FRH - EATRK - 48 - 5

Kit contents

5 - End accessible thread rod bracket

Note

- Suitable for M14 or M16 threaded rod.
- Threaded rod purchased separately.
- Brackets are recommended every 900 mm for direct channel mounting.

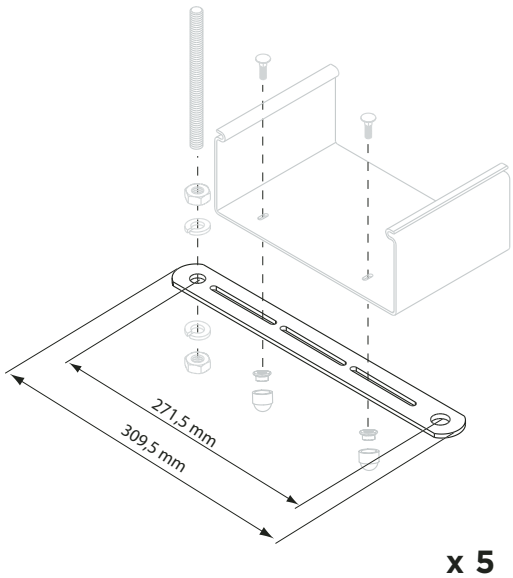

x 5

Light grey printed items are no part of the kit - 1 inch = 25,4 mm

End accessible threaded rod mounting kit 12" (300mm)

FRH - EATRK - 412 - 5

Kit contents

5 - End accessible thread rod bracket

Note

- Suitable for M14 and M16 threaded rod.
- Threaded rod purchased separately.
- Brackets are recommended every 900 mm for direct channel mounting.

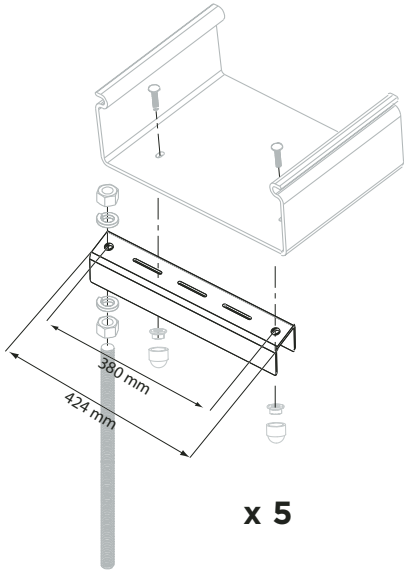

x 5

Saddle bracket, 4" (100mm)

FRH - TRSBK - 44 - 5

Kit contents

5 - Saddle bracket

Note

- Suitable for M14 and M16 threaded rod.
- Threaded rod purchased separately.
- Brackets are recommended every 900 mm for direct channel mounting.

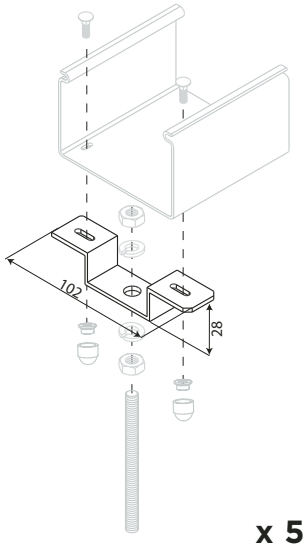

x 5

Saddle bracket, 8" (200mm)

FRH - TRSBK - 48 - 5

Kit contents

5 - Saddle bracket

Note

- Suitable for M14 and M16 threaded rod.
- Threaded rod purchased separately.
- Brackets are recommended every 900 mm for direct channel mounting.

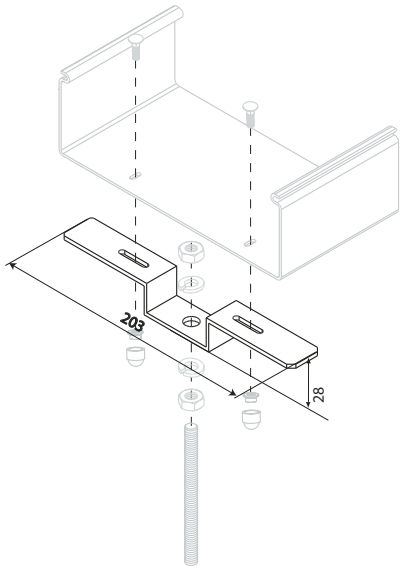

x 5

Light grey printed items are no part of the kit - 1 inch = 25,4 mm

Saddle bracket, 12″ (300mm)

FRH - TRSBK - 412 - 5

Kit contents

5 - Saddle bracket

Note

- Suitable for M14 and M16 threaded rod.
- Threaded rod purchased separately.
- Brackets are recommended every 900 mm for direct channel mounting.

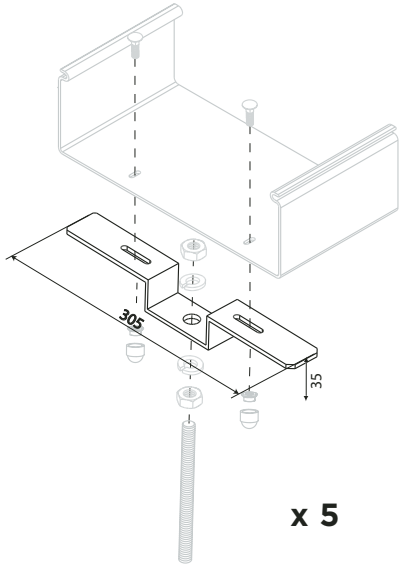

x 5

Equipment rack horizontal mounting kit 2″ (50mm)

FRH - ERHK - 22 - 5

Kit contents

5 - Equipment rack horizontal bracket

Note

- The supplied bracket is attached to the 12 - 24 tapped holes in the uprights.
- Brackets are recommended every other rack for direct channel mounting.
- Bracket can also be used for wall mounting.

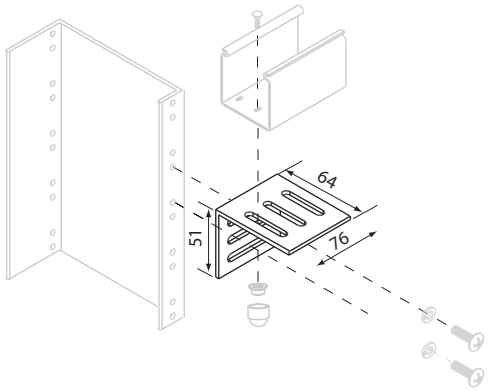

x 5

Equipment rack horizontal mounting kit 4″ (100mm)

FRH - ERHK - 44 - 5

Kit contents

5 - Equipment rack horizontal bracket

Note

- The supplied bracket is attached to the 12 - 24 tapped holes in the uprights.
- Brackets are recommended every other rack for direct channel mounting.
- Bracket can also be used for wall mounting.

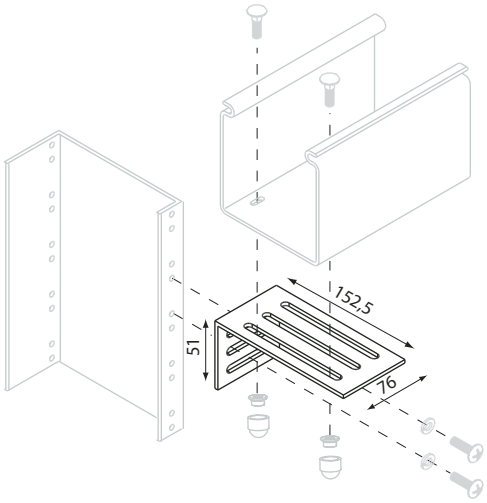

x 5

Light grey printed items are no part of the kit - 1 inch = 25,4 mm

Equipment rack horizontal mounting kit 8″ (200mm)

FRH - ERHK - 48 - 5

Kit contents

5 - Equipment rack horizontal bracket

Note

- The supplied bracket is attached to the 12 - 24 tapped holes in the uprights.
- Brackets are recommended every other rack for direct channel mounting.
- Bracket can also be used for wall mounting.

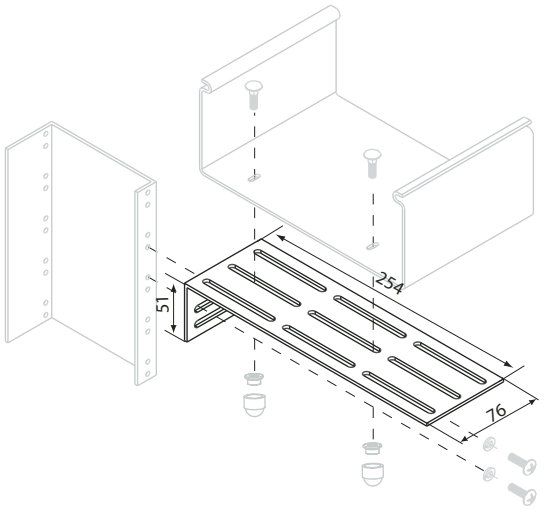

x 5

Hanger bracket, 4″ (100mm)

FRH - TRHB - 44 - 5

Kit contents

5 - Hanger bracket

Note

- Suitable for M14 and M16 threaded rod.
- Threaded rod purchased separately.
- Brackets are recommended every 900 mm for direct channel mounting.

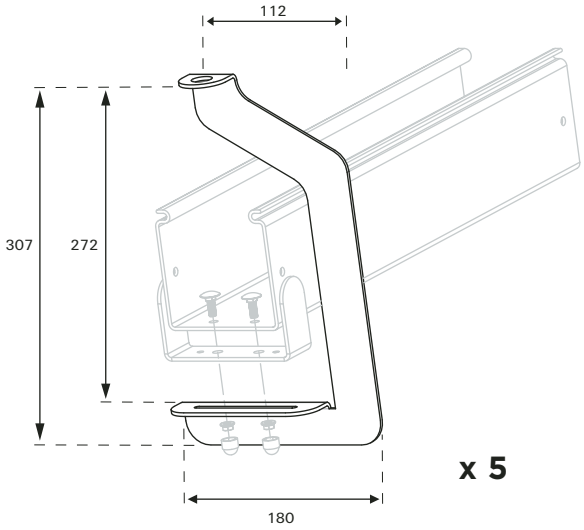

x 5

Hanger bracket, 8″ (200mm)

FRH - TRHB - 48 - 5

Kit contents

5 - Hanger bracket

Note

- Suitable for M14 and M16 threaded rod.
- Threaded rod purchased separately.
- Brackets are recommended every 900 mm for direct channel mounting.

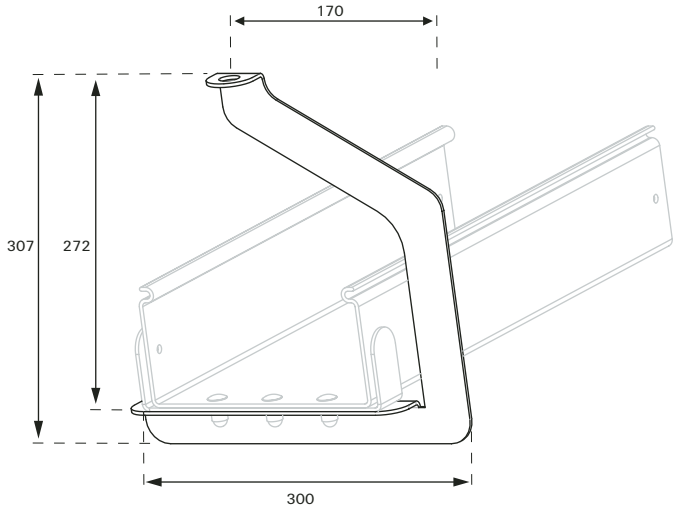

x 5

Light grey printed items are no part of the kit - 1 inch = 25,4 mm

Hanger bracket, 12" (300mm)

FRH - TRHB - 412 - 5

Kit contents

5 - Hanger bracket

Note

- Suitable for M14 and M16 threaded rod.
- Threaded rod purchased separately.
- Brackets are recommended every 900 mm for direct channel mounting.

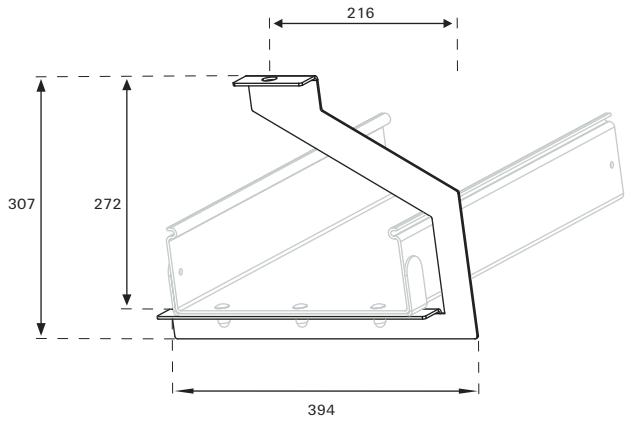

x 5

Ladder rack mounting kit, 4" or 2"

FRH - LRMK - **XX** - 5

└ Size

22 - 2" x 2"

44 - 4" x 4"

Kit contents

5 - Ladder rack mounting bracket standard

5 - M10 bolt

Note

- The supplied bracket hangs from either 2" or 1.5" side bars.
- Brackets are recommended every 900 mm for direct channel mounting.

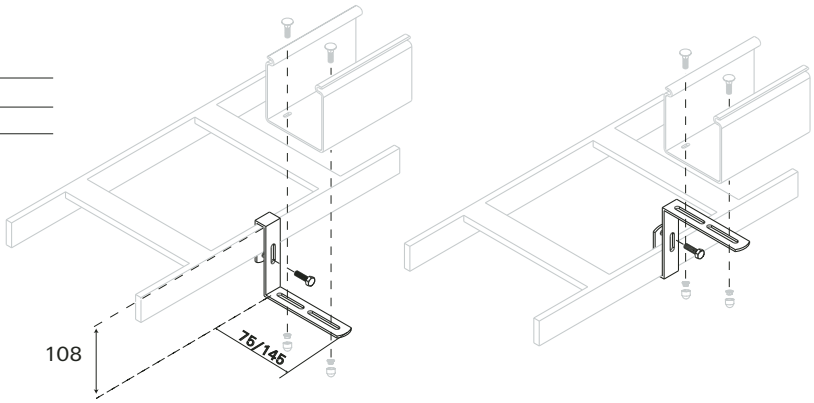

x 5

Ladder rack mounting kit, 8"

FRH - LRMK - 48 - 5

Kit contents

5 - Ladder rack mounting bracket standard

5 - M10 bolt

Note

- The supplied bracket hangs from either 2" or 1.5" side bars.
- Brackets are recommended every 900 mm for direct channel mounting.

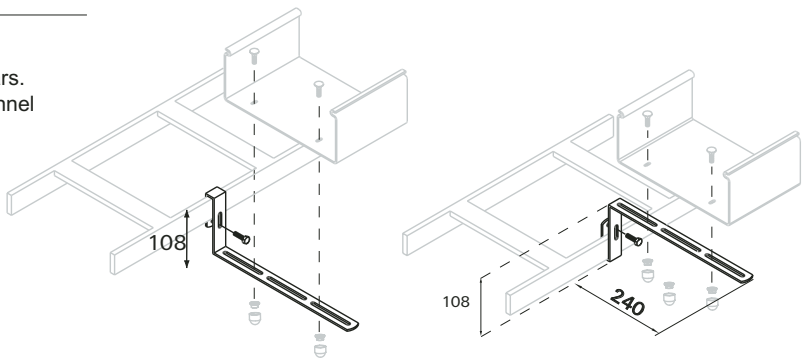

x 5

Light grey printed items are no part of the kit - 1 inch = 25,4 mm

Offset ladder rack mounting kit 4”

FRH - FLRMK - 44 - 5

Kit contents

5 - Ladder rack mounting bracket offset
5 - M10 bolt

Note

- The supplied bracket hangs from either 2" or 1.5" side bars.
- Brackets are recommended every 900 mm for direct channel mounting.

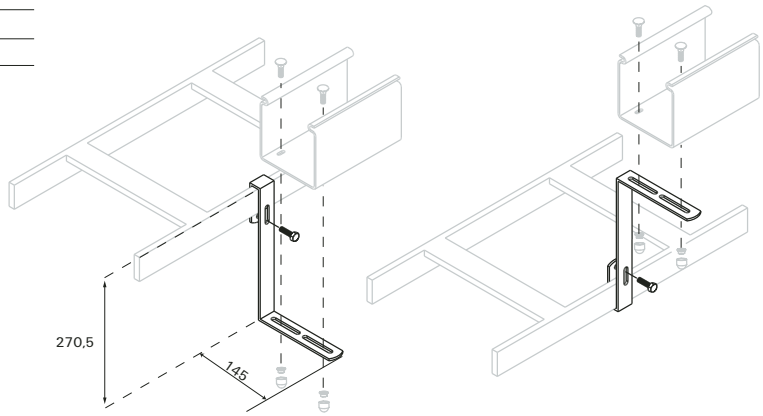

x 5

Offset ladder rack mounting kit 8”

FRH - FLRMK - 48 - 5

Kit contents

5 - Ladder rack mounting bracket offset 4 x 8
5 - M10 bolt

Note

- The supplied bracket hangs from either 2" or 1.5" side bars.
- Brackets are recommended every 900 mm for direct channel mounting.

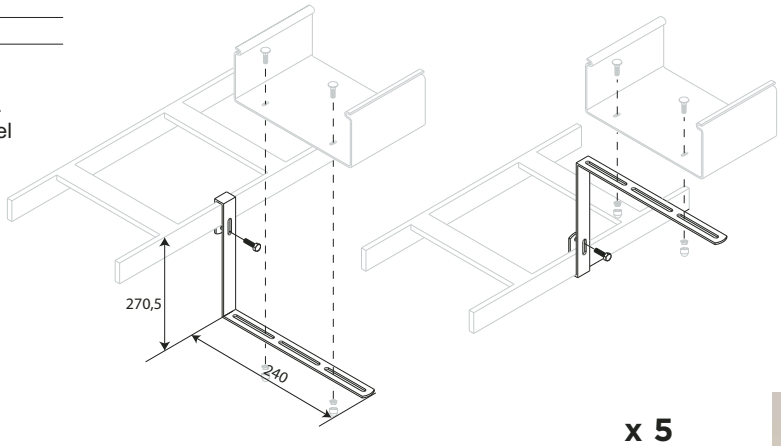

x 5

Side wall support 4"

FRH - SWS - 44 - 5

Kit contents

5 - Side wall support

Note

- Provides additional support when no covers are used on the duct.

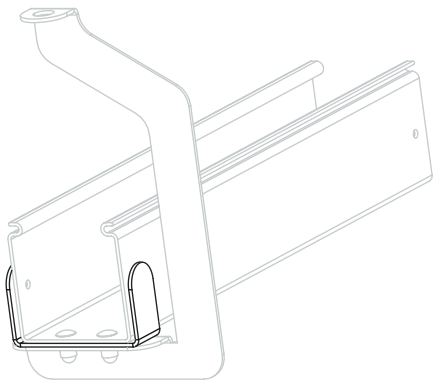

x 5

Light grey printed items are no part of the kit - 1 inch = 25,4 mm

Side wall support 8″

FRH - SWS - 48 - 5

Kit contents

5 - Side wall support

Note

• Provides additional support when no covers are used on the duct.

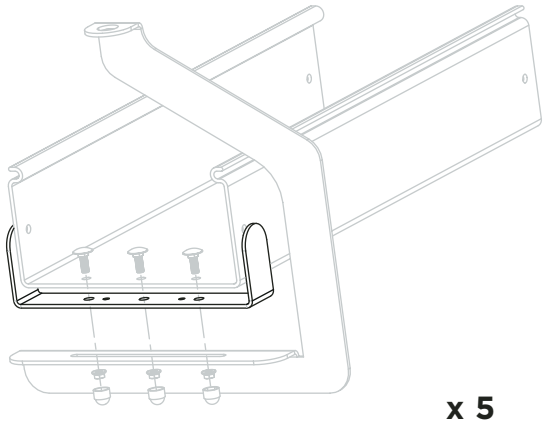

x 5

Side wall support 12″

FRH - SWS - 412 - 5

Kit contents

5 - Side wall support

Note

• Provides additional support when no covers are used on the duct.

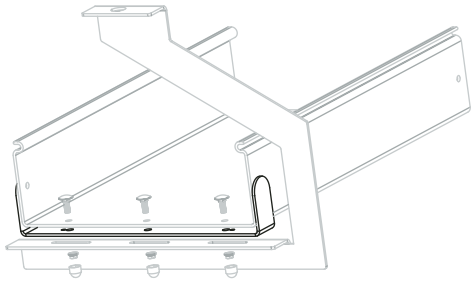

x 5

Equipment rack vertical mounting kit 2″ (50mm)

FRH - ERVK - 22 - 5

Kit contents

5x2 - “L” adjustable bracket

Note

- The supplied bracket is attached to the 12 - 24 tapped holes in the uprights.
- Brackets are recommended to match equipment.
- Brackets are recommended every 300 mm.

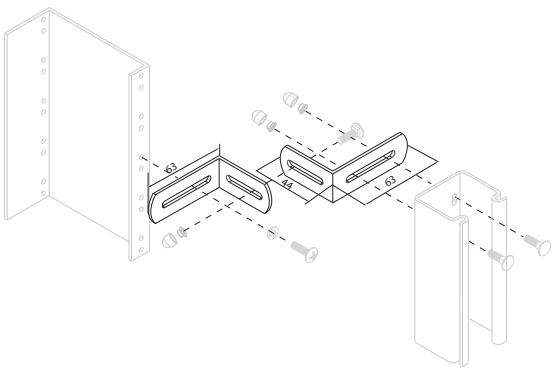

x 5

Light grey printed items are no part of the kit - 1 inch = 25,4 mm

Equipment rack vertical mounting kit 4″ (100mm)

FRH - ERVK - 44 - 5

Kit contents

5 - ”L” adjustable bracket - small
5 - “L” adjustable bracket - large

Note

- The supplied bracket is attached to the 12 - 24 tapped holes in the uprights.
- Brackets are recommended to match equipment.
- Brackets are recommended every 300 mm.

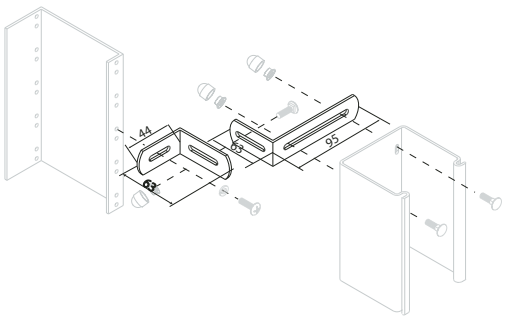

x 5

Light grey printed items are no part of the kit - 1 inch = 25,4 mm

ALPHABETICAL INDEX

FRH-4HE-22YLP 13
FRH-4HE-412YLP 13
FRH-4HE-44YLP 13
FRH-4HE-48YLP 13
FRH-4VIE-22YLP 14
FRH-4VIE-412YLP 14
FRH-4VIE-44YLP 14
FRH-4VIE-48YLP 14
FRH-4VOE-22YLP 13
FRH-4VOE-412YLP 13
FRH-4VOE-44YLP 13
FRH-4VOE-48YLP 13
FRH-9HE-22YLP 12
FRH-9HE-412YLP 12
FRH-9HE-44YLP 12
FRH-9HE-48YLP 12
FRH-9VIE-22YLP 14
FRH-9VIE-412YLP 14
FRH-9VIE-44YLP 14
FRH-9VIE-48YLP 14
FRH-9VOE-22YLP 13
FRH-9VOE-412YLP 13
FRH-9VOE-44YLP 13
FRH-9VOE-48YLP 13
FRH-BNC-16-200 30
FRH-CRSS-22YLP 19
FRH-CRSS-412YLP 19
FRH-CRSS-44YLP 19
FRH-CRSS-48YLP 19
FRH-CS44-48YLP 19
FRH-DRIL 28
FRH-DRIL-QD1-TEM 28
FRH-DVT-30-412YLP 28
FRH-DVT-30-48YLP 18
FRH-DVT-30YLP 18
FRH-EATRK-412-5 31
FRH-EATRK-44-5 30
FRH-EATRK-48-5 30
FRH-EDCP-22YLP 21
FRH-EDCP-412YLP 21
FRH-EDCP-44YLP 21
FRH-EDCP-48YLP 21
FRH-ERHK-22-5 32
FRH-ERHK-44-5 32
FRH-ERHK-48-5 33
FRH-ERVK-22-5 36
FRH-ERVK-44-5 37
FRH-FLEX-TUBE-CLAMP-1-10 24
FRH-FLEX-TUBE-CLAMP-2-10 24
FRH-FLRMK-44-5 35
FRH-FLRMK-48-5 35
FRH-HT2-44YLP 15
FRH-HT44-412YLP 16
FRH-HT44-48YLP 15
FRH-HT48-412YLP 15
FRH-HTC-22YLP 14
FRH-HTC-412YLP 14
FRH-HTC-44YLP 14
FRH-HTC-48YLP 14
FRH-LRMK-22-5 34
FRH-LRMK-44-5 34
FRH-LRMK-48-5 34
FRH-LTFA-44YLP 22
FRH-QD1-FL-1-2 25
FRH-QD1-FL-2-1 25
FRH-QD1-I-YL 25
FRH-QD1-O-YL 25
FRH-RD412-44YLP 20
FRH-RD412-48YLP 20
FRH-RD44-22YLP 19
FRH-RD48-44YLP 20
FRH-RDL48-44YLP 21
FRH-RDR48-44YLP 21
FRH-SCTF-22 28
FRH-SCTF-44 28
FRH-SFT-10-041 24
FRH-SFT-20-041 24
FRH-SLWC-22YLP 10
FRH-SLWC-44YLP 10
FRH-SPLC-22YLP 12
FRH-SPLC-412YLP 12
FRH-SPLC-44YLP 12
FRH-SPLC-48YLP 12
FRH-SPLF-22P 12
FRH-SPLF-412P 12
FRH-SPLF-44P 12
FRH-SPLF-48P 12
FRH-SQRD-22YLP 23
FRH-SQRD-DL-22YLP 23
FRH-SQRD-DL-44YLP 23
FRH-STWC-22YLP 10
FRH-STWC-412YLP 10
FRH-STWC-44YLP 10
FRH-STWC-48YLP 10
FRH-SWS-412-5 36
FRH-SWS-44-5 35
FRH-SWS-48-5 36
FRH-TRHB-412-5 34
FRH-TRHB-44-5 33
FRH-TRHB-48-5 33
FRH-TRMP-22YLP 22
FRH-TRMP-44YLP 22
FRH-TRSBK-412-5 32
FRH-TRSBK-44-5 31
FRH-TRSBK-48-5 31
FRH-VT2D-44YLP 17
FRH-VT2DD-44YLP 16
FRH-VT2DV-48YLP 17
FRH-VT4D-48YLP 17
FRH-VT4DV-412YLP 17
FRH-VTC-22YLP 16
FRH-VTC-44YLP 16
FRH-WB-22YLP 22
FRH-WB-412YLP 22
FRH-WB-44YLP 22
FRH-WB-48YLP 22
FRS-4HE-22YLP 13
FRS-4HE-412YLP 13
FRS-4HE-44YLP 13
FRS-4HE-48YLP 13
FRS-4VIE-22YLP 14
FRS-4VIE-412YLP 14
FRS-4VIE-44YLP 14
FRS-4VIE-48YLP 14
FRS-4VOE-22YLP 13
FRS-4VOE-412YLP 13
FRS-4VOE-44YLP 13
FRS-4VOE-48YLP 13
FRS-9HE-22YLP 12
FRS-9HE-412YLP 12
FRS-9HE-44YLP 12
FRS-9HE-48YLP 12
FRS-9VIE-22YLP 14
FRS-9VIE-412YLP 14
FRS-9VIE-44YLP 14
FRS-9VIE-48YLP 14
FRS-9VOE-22YLP 13
FRS-9VOE-412YLP 13
FRS-9VOE-44YLP 13
FRS-9VOE-48YLP 13
FRS-CRSS-22YLP 19
FRS-CRSS-412YLP 19
FRS-CRSS-44YLP 19
FRS-CRSS-48YLP 19
FRS-CS44-48YLP 19
FRS-DVT-30-412YLP 18
FRS-DVT-30-48YLP 18
FRS-DVT-30YLP 18
FRS-EDCP-22YLP 21
FRS-EDCP-412YLP 21
FRS-EDCP-44YLP 21
FRS-EDCP-48YLP 21
FRS-HT2-44YLP 15
FRS-HT44-412YLP 16
FRS-HT44-48YLP 15
FRS-HT48-412YLP 15
FRS-HTC-22YLP 14
FRS-HTC-412YLP 14
FRS-HTC-44YLP 14
FRS-HTC-48YLP 14
FRS-LTFA-44YLP 22
FRS-RD412-44YLP 20
FRS-RD412-48YLP 20
FRS-RD44-22YLP 19
FRS-RD48-44YLP 20
FRS-RDL48-44YLP 21
FRS-RDR48-44YLP 21
FRS-SPLC-22YLP 12
FRS-SPLC-412YLP 12
FRS-SPLC-44YLP 12
FRS-SPLC-48YLP 12
FRS-SPLF-22P 12
FRS-SPLF-412P 12
FRS-SPLF-44P 12
FRS-SPLF-48P 12
FRS-SQRD-22YLP 23
FRS-SQRD-DL-22YLP 23
FRS-SQRD-DL-44YLP 23
FRS-TRMP-22YLP 22
FRS-TRMP-44YLP 22
FRS-VT2D-44YLP 17
FRS-VT2DD-44YLP 16
FRS-VT2DV-48YLP 17
FRS-VT4D-48YLP 17
FRS-VT4DV-412YLP 17
FRS-VTC-22YLP 16
FRS-VTC-44YLP 16
FRS-WB-22YLP 22
FRS-WB-412YLP 22
FRS-WB-44YLP 22
FRS-WB-48YLP 22

Tyco Electronics, TE logo and Lightrax are trademarks.

The information given herein, including drawings, illustrations and schematics which are intended for illustration purposes only, is believed to be reliable. However, Tyco Electronics makes no warranties as to its accuracy or completeness and disclames any liability in connection with its use.
Tyco Electronics' obligations shall only be as set forth in Tyco Electronics' Standard Terms and Conditions of Sale for this product and in no case will Tyco Electronics be liable for any incidental, indirect or consequential damages arising out of the sale, resale, use or misuse of the product. Users of Tyco Electronics products should make their own evaluation to determine the suitability of each such product for the specific application.

Tyco Electronics Raychem NV
Diestsesteenweg 692
3010 Kessel-Lo - Belgium
Tel 32-16-351 011
Fax 32-16-351 697
www.tycoelectronics.com
www.telecomosp.com
TC 583/CAT/6 07/07

Tyco Electronics
Our commitment. Your advantage.